Linear bushing KBO25 INA

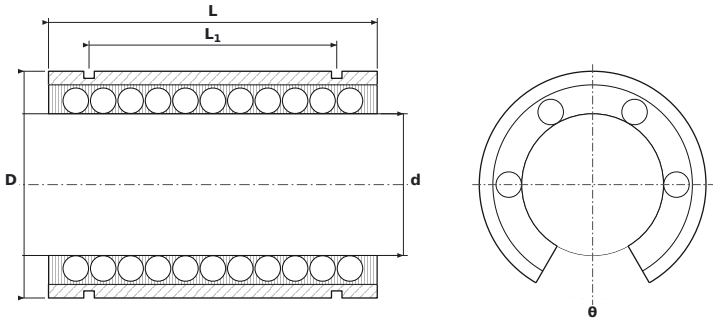

DIMENSIONS

d	bore diameter	**25 mm**
D	outside diameter	**40 mm**
L	bushing length	**58 mm**
L1	distance between circlip grooves	**43.7 mm**
L2	circlip groove width	**1.85 mm**
D0	groove bottom diameter	**37.5 mm**

SPECIFICATIONS

Manufacturer	**INA**
Manufacturer designation	**KBO25**
Rolling elements	**ball bushing**
Basic dynamic load rating C	**2.85 kN**
Basic static load rating C0	**2.3 kN**
Mass	**0.156 kg**