Linear bushing KBO30 INA

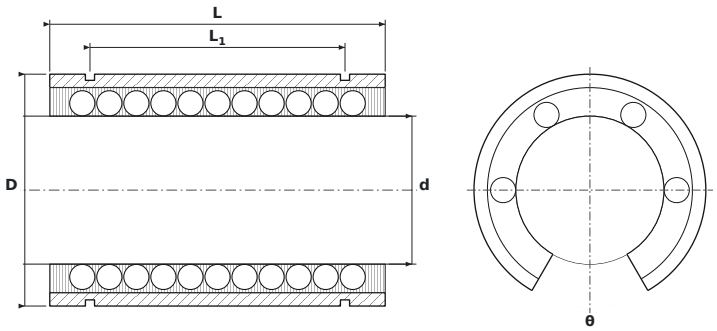

DIMENSIONS

d	bore diameter	**30 mm**
D	outside diameter	**47 mm**
L	bushing length	**68 mm**
L1	distance between circlip grooves	**51.7 mm**
L2	circlip groove width	**1.85 mm**
D0	groove bottom diameter	**44.5 mm**

SPECIFICATIONS

Manufacturer	**INA**
Manufacturer designation	**KBO30**
Rolling elements	**ball bushing**
Basic dynamic load rating C	**3.7 kN**
Basic static load rating C0	**3 kN**
Mass	**0.255 kg**