Linear bushing KBO40 INA

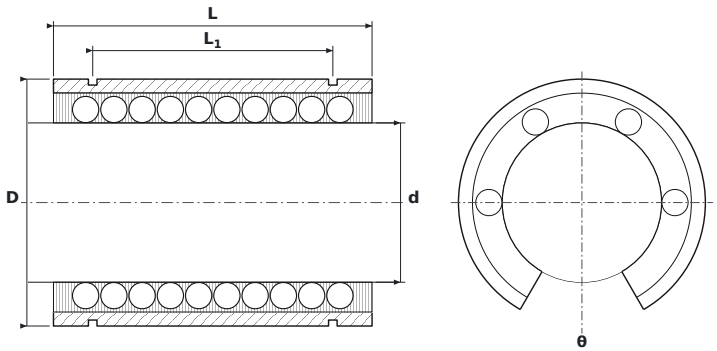

DIMENSIONS

d	bore diameter	**40 mm**
D	outside diameter	**62 mm**
L	bushing length	**80 mm**
L1	distance between circlip grooves	**60.3 mm**
L2	circlip groove width	**2.15 mm**
D0	groove bottom diameter	**59 mm**

SPECIFICATIONS

Manufacturer	**INA**
Manufacturer designation	**KBO40**
Rolling elements	**ball bushing**
Basic dynamic load rating C	**6.1 kN**
Basic static load rating C0	**4.6 kN**
Mass	**0.517 kg**