Linear bushing KBO50 PP INA

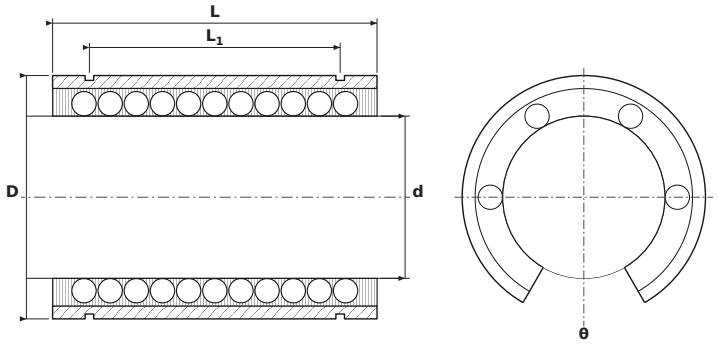

DIMENSIONS

d	bore diameter	**50 mm**
D	outside diameter	**75 mm**
L	bushing length	**100 mm**
L1	distance between circlip grooves	**77.3 mm**
L2	circlip groove width	**2.65 mm**
D0	groove bottom diameter	**72 mm**

SPECIFICATIONS

Manufacturer	**INA**
Manufacturer designation	**KBO50 PP**
Rolling elements	**ball bushing**
Basic dynamic load rating C	**8.9 kN**
Basic static load rating C0	**6.6 kN**
Mass	**0.843 kg**