Linear bushing KH3050 ZEN

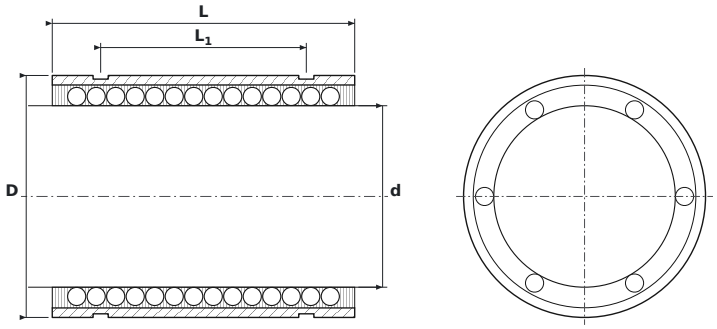

DIMENSIONS

d	bore diameter	**30 mm**
D	outside diameter	**40 mm**
L	bushing length	**50 mm**
L1	distance between circlip grooves	**34 mm**
L2	circlip groove width	**2.5 mm**

SPECIFICATIONS

Manufacturer	**ZEN**
Manufacturer designation	**KH3050**
Rolling elements	**ball bushing**
Seal	**open – no seals**
Basic dynamic load rating C	**3.3 kN**
Basic static load rating C0	**2.7 kN**
Mass	**0.092 kg**