Linear bushing KH5070 NTN

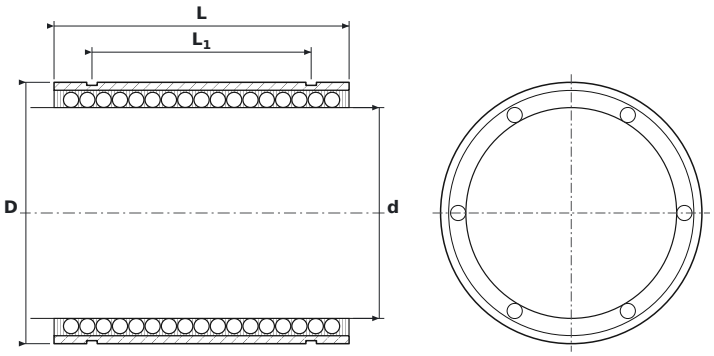

DIMENSIONS

d	bore diameter	**50 mm**
D	outside diameter	**62 mm**
L	bushing length	**70 mm**
L1	distance between circlip grooves	**52 mm**
L2	circlip groove width	**2.5 mm**

SPECIFICATIONS

Manufacturer	**NTN**
Manufacturer designation	**KH5070**
Rolling elements	**ball bushing**
Seal	**open – no seals**
Basic dynamic load rating C	**6.8 kN**
Basic static load rating C0	**6.3 kN**
Mass	**0.255 kg**