Linear bushing LME20 AJ SAMICK

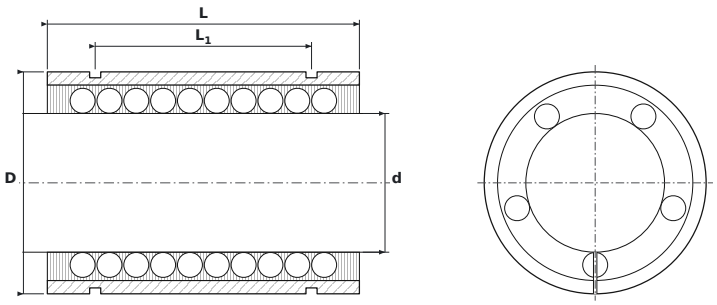

DIMENSIONS

d	bore diameter	**20 mm**
D	outside diameter	**32 mm**
L	bushing length	**45 mm**
L1	distance between circlip grooves	**31.2 mm**
L2	circlip groove width	**1.6 mm**
D0	groove bottom diameter	**30.3 mm**

SPECIFICATIONS

Manufacturer	**SAMICK**
Manufacturer designation	**LME20 AJ**
Rolling elements	**ball bushing**
Basic dynamic load rating C	**1.57 kN**
Basic static load rating C0	**1.23 kN**
Mass	**0.073 kg**