Linear bushing LME20 UU THK

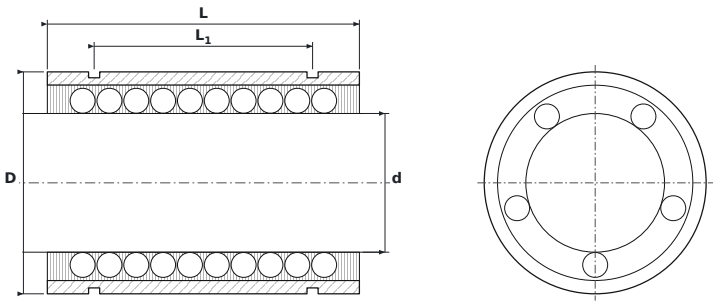

DIMENSIONS

d	bore diameter	**20 mm**
D	outside diameter	**32 mm**
L	bushing length	**45 mm**
L1	distance between circlip grooves	**31.5 mm**
L2	circlip groove width	**1.6 mm**
D0	groove bottom diameter	**30.3 mm**
h0	cut-out height (from axis to edge)	**2 mm**
h1	cut-out height (from bore)	**10 mm**
θ	cut-out angle	**60 mm**

SPECIFICATIONS

Manufacturer	**THK**
Manufacturer designation	**LME20 UU**
Rolling elements	**ball bushing**
Basic dynamic load rating C	**0.86 kN**
Basic static load rating C0	**1.37 kN**
Mass	**0.091 kg**