CASTOMER

DATASHEET

Linear bushing LME30 UU THK

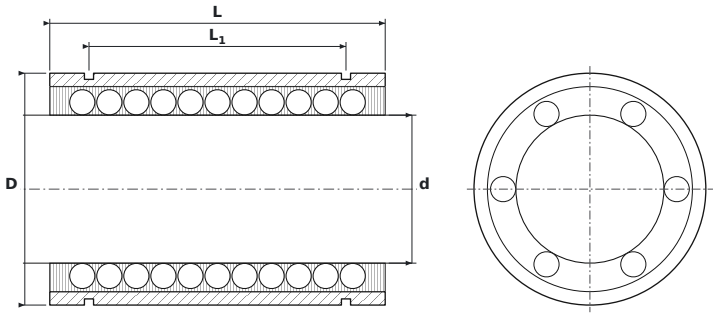

DIMENSIONS

d	bore diameter	**30 mm**
D	outside diameter	**47 mm**
L	bushing length	**68 mm**
L1	distance between circlip grooves	**52.1 mm**
L2	circlip groove width	**1.85 mm**
D0	groove bottom diameter	**44.5 mm**
h0	cut-out height (from axis to edge)	**2 mm**
h1	cut-out height (from bore)	**12.5 mm**
θ	cut-out angle	**50 mm**

SPECIFICATIONS

Manufacturer	**THK**
Manufacturer designation	**LME30 UU**
Rolling elements	**ball bushing**
Basic dynamic load rating C	**1.57 kN**
Basic static load rating C0	**2.75 kN**
Mass	**0.325 kg**