CASTOMER

DATASHEET

Linear bushing LME40 UU THK

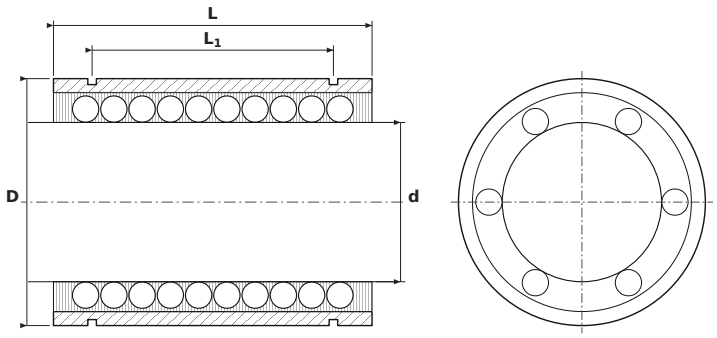

DIMENSIONS

d	bore diameter	**40 mm**
D	outside diameter	**62 mm**
L	bushing length	**80 mm**
L1	distance between circlip grooves	**60.6 mm**
L2	circlip groove width	**2.15 mm**
D0	groove bottom diameter	**59 mm**
h0	cut-out height (from axis to edge)	**3 mm**
h1	cut-out height (from bore)	**16.8 mm**
θ	cut-out angle	**50 mm**

SPECIFICATIONS

Manufacturer	**THK**
Manufacturer designation	**LME40 UU**
Rolling elements	**ball bushing**
Basic dynamic load rating C	**2.16 kN**
Basic static load rating C0	**4.02 kN**
Mass	**0.705 kg**