Linear bushing LMEK50 UU SAMICK

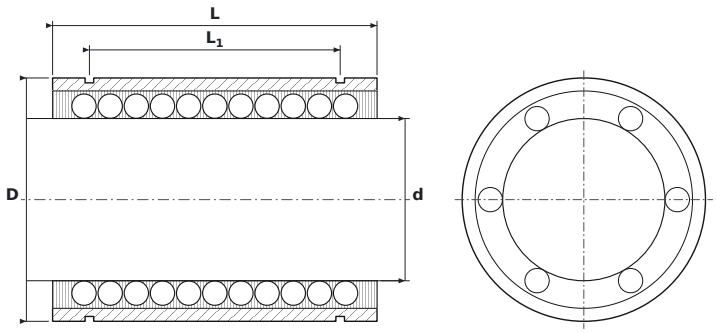

DIMENSIONS

d	bore diameter	**50 mm**
D	outside diameter	**75 mm**
L	bushing length	**100 mm**
L1	distance between circlip grooves	**77.3 mm**
L2	circlip groove width	**2.65 mm**
D0	groove bottom diameter	**72 mm**

SPECIFICATIONS

Manufacturer	**SAMICK**
Manufacturer designation	**LMEK50 UU**
Rolling elements	**ball bushing**
Basic dynamic load rating C	**8.7 kN**
Basic static load rating C0	**6.3 kN**
Mass	**0.978 kg**