# Linear bushing LMES30 SAMICK

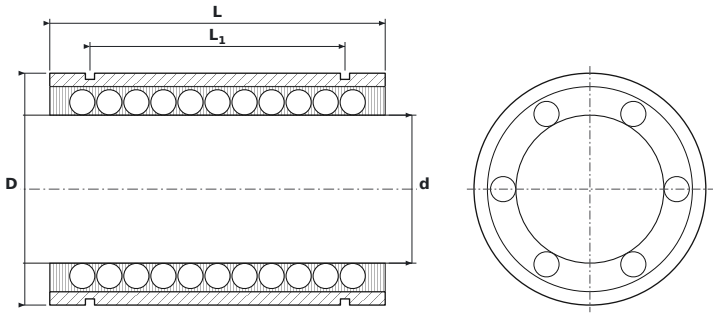


## DIMENSIONS

| | | |
|---|---|---|
| **d** | bore diameter | **30 mm** |
| **D** | outside diameter | **47 mm** |
| **L** | bushing length | **68 mm** |
| **L1** | distance between circlip grooves | **51.7 mm** |
| **L2** | circlip groove width | **1.85 mm** |
| **D0** | groove bottom diameter | **44.5 mm** |

## SPECIFICATIONS

| | |
|---|---|
| Manufacturer | **SAMICK** |
| Manufacturer designation | **LMES30** |
| Rolling elements | **ball bushing** |
| Basic dynamic load rating C | **3.6 kN** |
| Basic static load rating C0 | **2.85 kN** |
| Mass | **0.254 kg** |