Seal W16-24-7 BA DICHTOMATIK

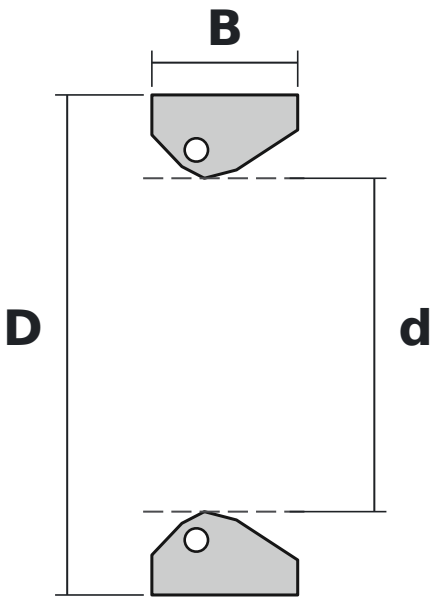

DIMENSIONS

d	bore diameter	**16 mm**
D	outside diameter	**24 mm**
B	width	**7 mm**

SPECIFICATIONS

Manufacturer	**DICHTOMATIK**
Manufacturer designation	**W16-24-7 BA**