Linear carriage BMW20 JG3V1 SCHNEEBERGER

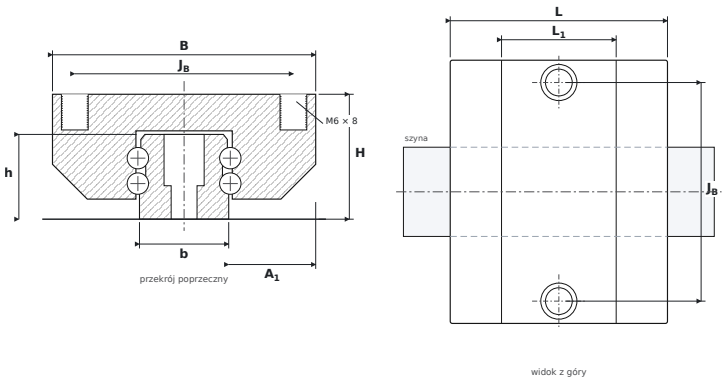

DIMENSIONS

B	carriage width	**59 mm**
H	overall height (carriage on rail)	**28 mm**
L	overall carriage length	**48.7 mm**
L1	body length (without end seals)	**25.7 mm**
JB	mounting hole spacing — across	**49 mm**
A1	rail flank to carriage side	**19.5 mm**
b	rail width	**20 mm**
h	rail height	**19 mm**

SPECIFICATIONS

Manufacturer	**SCHNEEBERGER**
Manufacturer designation	**BMW20 JG3V1**
Rolling elements	**four-row ball carriage**
Basic dynamic load rating C	**8.4 kN**
Basic static load rating C0	**13.1 kN**
Mass	**0.3 kg**
carriage mounting thread ($G_2 \times T_5$)	**M6 × 8 mm**
matching rail	**BM S 20 · screws M5**
static moments M_{0x} / M_{0Y} / M_{0Z}	**150 / 58 / 58 Nm**