Linear carriage BMW25 HG3V1 SCHNEEBERGER

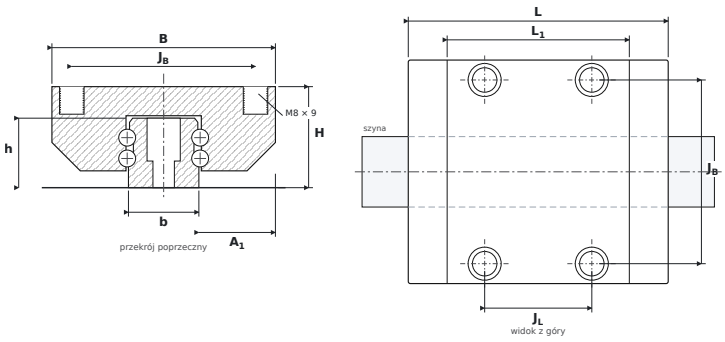

DIMENSIONS

B	carriage width	**73 mm**
H	overall height (carriage on rail)	**33 mm**
L	overall carriage length	**84.9 mm**
L1	body length (without end seals)	**59.5 mm**
JB	mounting hole spacing — across	**60 mm**
JL	corner hole spacing — along	**35 mm**
A1	rail flank to carriage side	**25 mm**
b	rail width	**23 mm**
h	rail height	**22.7 mm**

SPECIFICATIONS

Manufacturer	**SCHNEEBERGER**
Manufacturer designation	**BMW25 HG3V1**
Rolling elements	**four-row ball carriage**
Basic dynamic load rating C	**21.1 kN**
Basic static load rating C0	**46.1 kN**
Mass	**0.6 kg**
carriage mounting thread ($G_2 \times T_5$)	**M8 × 9 mm**
matching rail	**BM S 25 · screws M6**
static moments M_{0x} / M_{0Y} / M_{0Z}	**631 / 513 / 513 Nm**