Linear carriage BMW25 JG3V1 SCHNEEBERGER

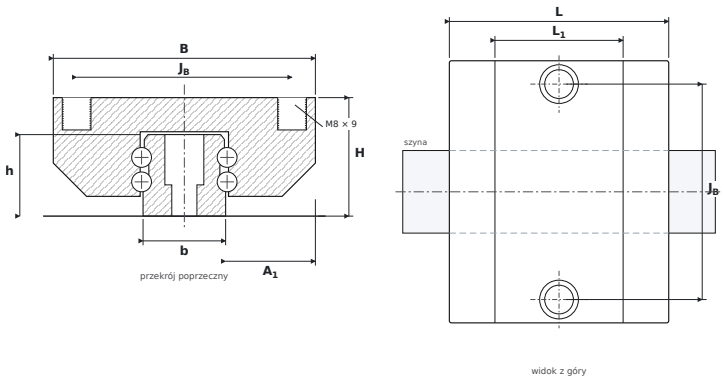

DIMENSIONS

B	carriage width	**73 mm**
H	overall height (carriage on rail)	**33 mm**
L	overall carriage length	**61.1 mm**
L1	body length (without end seals)	**35.7 mm**
JB	mounting hole spacing — across	**60 mm**
A1	rail flank to carriage side	**25 mm**
b	rail width	**23 mm**
h	rail height	**22.7 mm**

SPECIFICATIONS

Manufacturer	**SCHNEEBERGER**
Manufacturer designation	**BMW25 JG3V1**
Rolling elements	**four-row ball carriage**
Basic dynamic load rating C	**12.8 kN**
Basic static load rating C0	**18.2 kN**
Mass	**0.4 kg**
carriage mounting thread ($G_2 \times T_5$)	**M8 × 9 mm**
matching rail	**BM S 25 · screws M6**
static moments M_{0x} / M_{0Y} / M_{0Z}	**251 / 101 / 101 Nm**