Linear carriage BMW30 JG3V1 SCHNEEBERGER

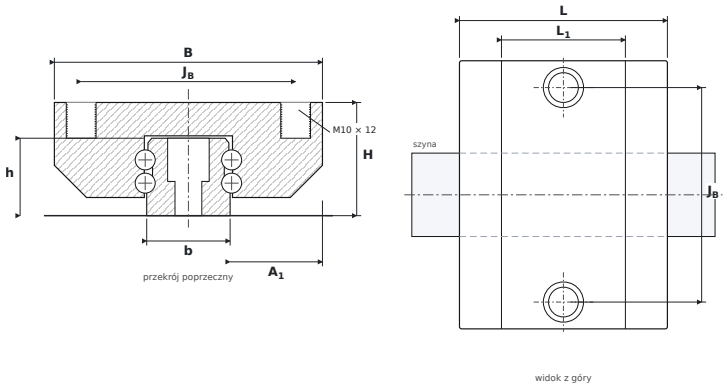

DIMENSIONS

B	carriage width	**90 mm**
H	overall height (carriage on rail)	**38 mm**
L	overall carriage length	**69.8 mm**
L1	body length (without end seals)	**41.6 mm**
JB	mounting hole spacing — across	**72 mm**
A1	rail flank to carriage side	**31 mm**
b	rail width	**28 mm**
h	rail height	**26 mm**

SPECIFICATIONS

Manufacturer	**SCHNEEBERGER**
Manufacturer designation	**BMW30 JG3V1**
Rolling elements	**four-row ball carriage**
Basic dynamic load rating C	**17.5 kN**
Basic static load rating C0	**24.7 kN**
Mass	**0.8 kg**
carriage mounting thread ($G_2 \times T_5$)	**M10 × 12 mm**
matching rail	**BM S 30 · screws M8**
static moments M_{0x} / M_{0Y} / M_{0Z}	**434 / 161 / 161 Nm**