Linear carriage SHS35 RSS THK

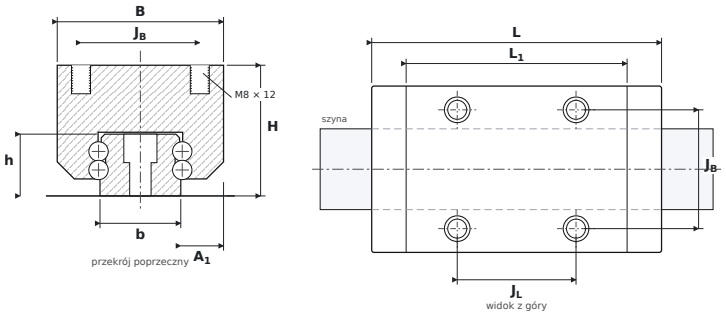

DIMENSIONS

B	carriage width	**70 mm**
H	overall height (carriage on rail)	**55 mm**
L	overall carriage length	**122 mm**
L1	body length (without end seals)	**93 mm**
JB	mounting hole spacing — across	**50 mm**
JL	corner hole spacing — along	**50 mm**
A1	rail flank to carriage side	**18 mm**
b	rail width	**34 mm**
h	rail height	**26 mm**

SPECIFICATIONS

Manufacturer	**THK**
Manufacturer designation	**SHS35 RSS**
Rolling elements	**four-row ball carriage**
Basic dynamic load rating C	**62.3 kN**
Basic static load rating C0	**96.6 kN**
Mass	**1.8 kg**
carriage mounting thread ($G_2 \times T_5$)	**M8 × 12 mm**
matching rail	**SHS35**
static moments M_{0x} / M_{0Y} / M_{0Z}	**1,360 / 1,380 / 1,530 Nm**