Linear carriage SHS45 LCSS THK

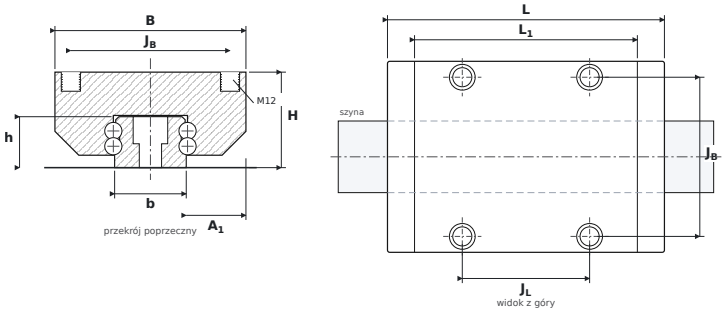

DIMENSIONS

B	carriage width	**120 mm**
H	overall height (carriage on rail)	**60 mm**
L	overall carriage length	**174 mm**
L1	body length (without end seals)	**140 mm**
JB	mounting hole spacing — across	**100 mm**
JL	corner hole spacing — along	**80 mm**
A1	rail flank to carriage side	**37.5 mm**
b	rail width	**45 mm**
h	rail height	**32 mm**

SPECIFICATIONS

Manufacturer	**THK**
Manufacturer designation	**SHS45 LCSS**
Rolling elements	**four-row ball carriage**
Basic dynamic load rating C	**100 kN**
Basic static load rating C0	**166 kN**
Mass	**4.19 kg**
carriage mounting thread ($G_2 \times T_5$)	**M12**
matching rail	**SHS45**
static moments M_{0x} / M_{0Y} / M_{0Z}	**3,460 / 3,460 / 3,530 Nm**