CASTOMER

DATASHEET

Linear carriage SHW35 CANSS THK

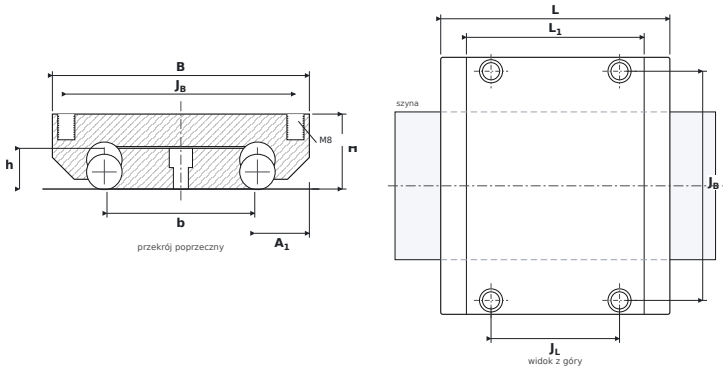

DIMENSIONS

B	carriage width	**120 mm**
H	overall height (carriage on rail)	**35 mm**
L	overall carriage length	**107 mm**
L1	body length (without end seals)	**83 mm**
JB	mounting hole spacing — across	**107 mm**
JL	corner hole spacing — along	**60 mm**
A1	rail flank to carriage side	**25.5 mm**
b	rail width	**69 mm**
h	rail height	**19 mm**

SPECIFICATIONS

Manufacturer	**THK**
Manufacturer designation	**SHW35 CANSS**
Rolling elements	**ball carriage**
Basic dynamic load rating C	**35.5 kN**
Basic static load rating C0	**49.2 kN**
Mass	**1.4 kg**
carriage mounting thread ($G_2 \times T_5$)	**M8**
matching rail	**SHW35**
static moments M_{0x} / M_{0Y} / M_{0Z}	**603 / 603 / 1,630 Nm**