Linear carriage SR15 TBSS THK

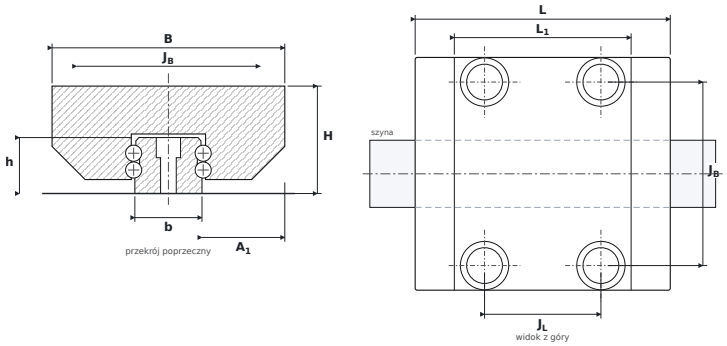

DIMENSIONS

B	carriage width	**52 mm**
H	overall height (carriage on rail)	**24 mm**
L	overall carriage length	**57 mm**
L1	body length (without end seals)	**39.5 mm**
JB	mounting hole spacing — across	**41 mm**
JL	corner hole spacing — along	**26 mm**
A1	rail flank to carriage side	**18.5 mm**
b	rail width	**15 mm**
h	rail height	**12.5 mm**

SPECIFICATIONS

Manufacturer	**THK**
Manufacturer designation	**SR15 TBSS**
Rolling elements	**four-row ball carriage, full complement**
Basic dynamic load rating C	**9.51 kN**
Basic static load rating C0	**19.3 kN**
Mass	**0.2 kg**
matching rail	**SR15**
static moments M_{0x} / M_{0Y} / M_{0Z}	**93 / 57 / 113 Nm**