Linear carriage SR20 SBSS THK

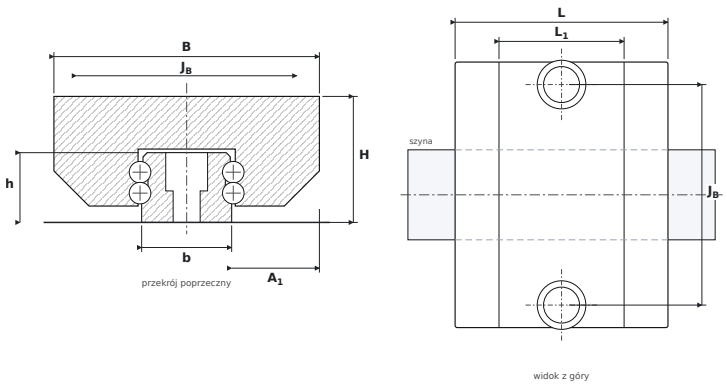

DIMENSIONS

B	carriage width	**59 mm**
H	overall height (carriage on rail)	**28 mm**
L	overall carriage length	**47.3 mm**
L1	body length (without end seals)	**27.8 mm**
JB	mounting hole spacing — across	**49 mm**
A1	rail flank to carriage side	**19.5 mm**
b	rail width	**20 mm**
h	rail height	**15.5 mm**

SPECIFICATIONS

Manufacturer	**THK**
Manufacturer designation	**SR20 SBSS**
Rolling elements	**four-row ball carriage, full complement**
Basic dynamic load rating C	**7.16 kN**
Basic static load rating C0	**14.4 kN**
Mass	**0.3 kg**
matching rail	**SR20**
static moments M_{0x} / M_{0Y} / M_{0Z}	**53 / 33 / 110 Nm**