Linear carriage SR20 WSS THK

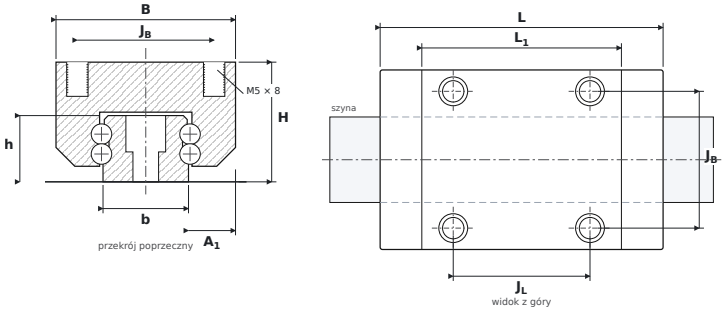

DIMENSIONS

B	carriage width	**42 mm**
H	overall height (carriage on rail)	**28 mm**
L	overall carriage length	**66.2 mm**
L1	body length (without end seals)	**46.7 mm**
JB	mounting hole spacing — across	**32 mm**
JL	corner hole spacing — along	**32 mm**
A1	rail flank to carriage side	**11 mm**
b	rail width	**20 mm**
h	rail height	**15.5 mm**

SPECIFICATIONS

Manufacturer	**THK**
Manufacturer designation	**SR20 WSS**
Rolling elements	**four-row ball carriage, full complement**
Basic dynamic load rating C	**12.5 kN**
Basic static load rating C0	**25.2 kN**
Mass	**0.3 kg**
carriage mounting thread ($G_2 \times T_5$)	**M5 × 8 mm**
matching rail	**SR20**
static moments M_{0x} / M_{0Y} / M_{0Z}	**146 / 90 / 194 Nm**