Linear carriage SR35 WSS THK

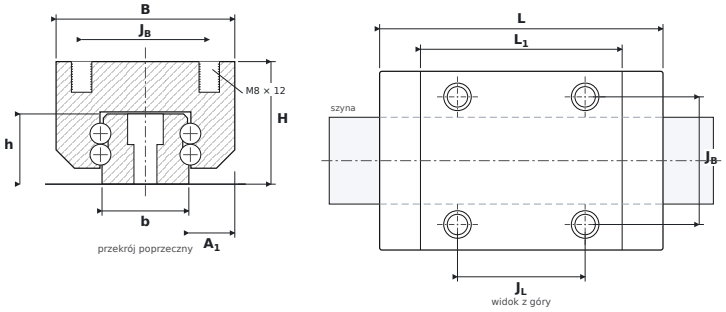

DIMENSIONS

B	carriage width	**70 mm**
H	overall height (carriage on rail)	**48 mm**
L	overall carriage length	**111 mm**
L1	body length (without end seals)	**79 mm**
JB	mounting hole spacing — across	**50 mm**
JL	corner hole spacing — along	**50 mm**
A1	rail flank to carriage side	**18 mm**
b	rail width	**34 mm**
h	rail height	**27.5 mm**

SPECIFICATIONS

Manufacturer	**THK**
Manufacturer designation	**SR35 WSS**
Rolling elements	**four-row ball carriage, full complement**
Basic dynamic load rating C	**41.7 kN**
Basic static load rating C0	**77.2 kN**
Mass	**1.2 kg**
carriage mounting thread ($G_2 \times T_5$)	**M8 × 12 mm**
matching rail	**SR35**
static moments M_{0x} / M_{0Y} / M_{0Z}	**740 / 454 / 1,010 Nm**