# Linear carriage SR45 WSS THK

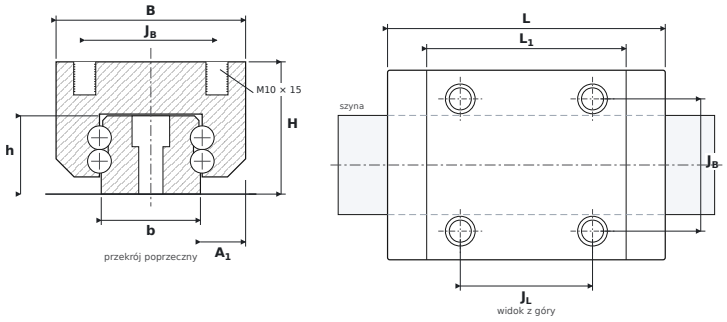


## DIMENSIONS

| | | |
|---|---|---|
| **B** | carriage width | **86 mm** |
| **H** | overall height (carriage on rail) | **60 mm** |
| **L** | overall carriage length | **126 mm** |
| **L1** | body length (without end seals) | **90.5 mm** |
| **JB** | mounting hole spacing — across | **60 mm** |
| **JL** | corner hole spacing — along | **60 mm** |
| **A1** | rail flank to carriage side | **20.5 mm** |
| **b** | rail width | **45 mm** |
| **h** | rail height | **35.5 mm** |

## SPECIFICATIONS

| | |
|---|---|
| Manufacturer | **THK** |
| Manufacturer designation | **SR45 WSS** |
| Rolling elements | **four-row ball carriage, full complement** |
| Basic dynamic load rating C | **55.3 kN** |
| Basic static load rating C0 | **101 kN** |
| Mass | **2.2 kg** |
| carriage mounting thread ($G_2 \times T_5$) | **M10 × 15 mm** |
| matching rail | **SR45** |
| static moments $M_{0x}$ / $M_{0Y}$ / $M_{0Z}$ | **1,100 / 679 / 1,770 Nm** |