Bearing unit ESF206 SNR

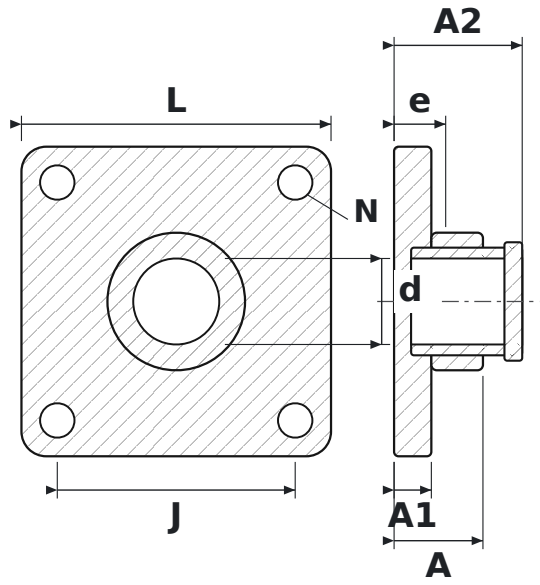

DIMENSIONS

d	shaft diameter	**30 mm**
L	housing length	**108 mm**
J	bolt hole spacing	**83 mm**
N	bolt hole diameter	**12 mm**
A	overall housing width (from mounting face)	**31 mm**
A1	flange thickness	**13 mm**
A2	overall length incl. protruding inner ring	**44.7 mm**
e	mounting face to bearing centre	**18 mm**

SPECIFICATIONS

Manufacturer	**SNR**
Manufacturer designation	**ESF206**
Rolling elements	**single-row ball bearing**