Bearing unit UCC205 J KOYO

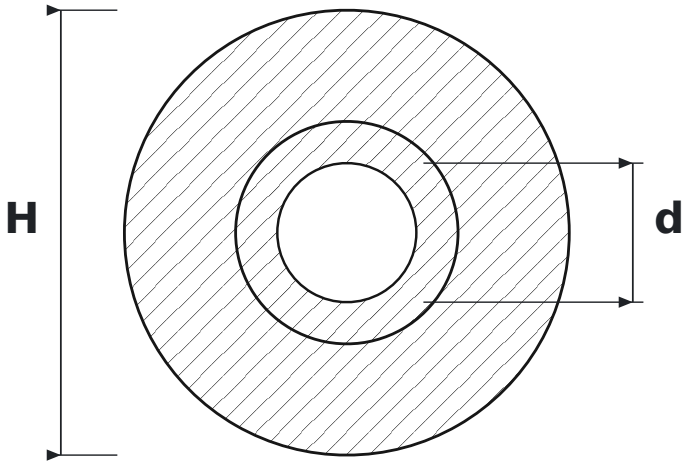

DIMENSIONS

d	shaft diameter	**25 mm**
H	housing diameter	**80 mm**

SPECIFICATIONS

Manufacturer	**KOYO**
Manufacturer designation	**UCC205 J**
Rolling elements	**single-row ball bearing**