Bearing unit UCF201-08-J7 FAG

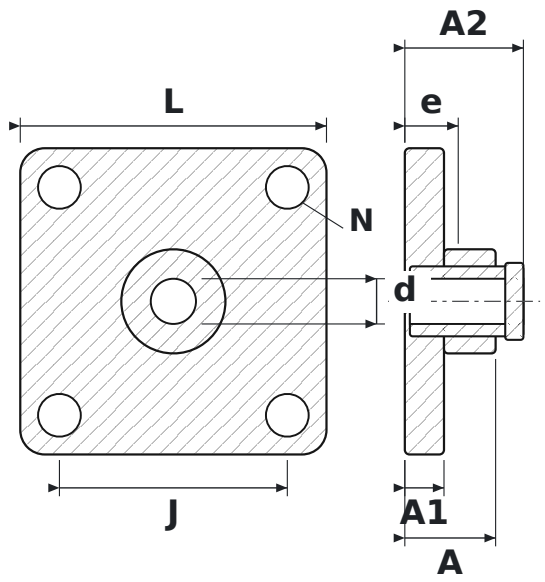

DIMENSIONS

d	shaft diameter	**12.7 mm**
L	housing length	**86 mm**
J	bolt hole spacing	**64 mm**
N	bolt hole diameter	**12 mm**
A	overall housing width (from mounting face)	**25.5 mm**
A1	flange thickness	**11 mm**
A2	overall length incl. protruding inner ring	**33.3 mm**
e	mounting face to bearing centre	**15 mm**

SPECIFICATIONS

Manufacturer	**FAG**
Manufacturer designation	**UCF201-08-J7**
Rolling elements	**single-row ball bearing**