Bearing unit UCF207-104 NKE

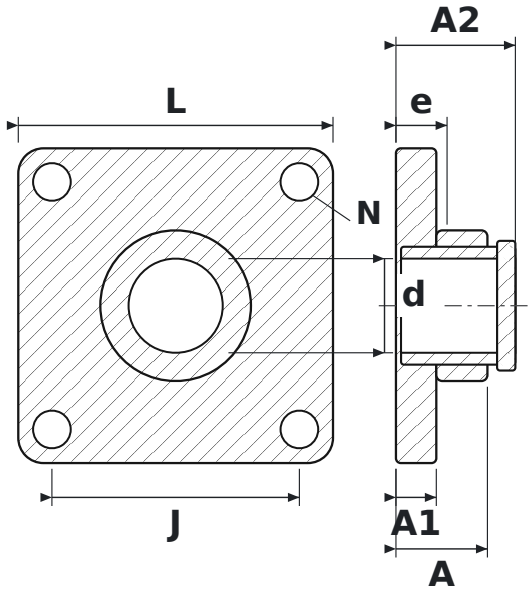

DIMENSIONS

d	shaft diameter	**35 mm**
L	housing length	**117 mm**
J	bolt hole spacing	**92 mm**
N	bolt hole diameter	**14 mm**
A	overall housing width (from mounting face)	**34 mm**
A1	flange thickness	**15 mm**
A2	overall length incl. protruding inner ring	**44.4 mm**
e	mounting face to bearing centre	**19 mm**

SPECIFICATIONS

Manufacturer	**NKE**
Manufacturer designation	**UCF207-104**
Rolling elements	**single-row ball bearing**