Bearing unit UCF209-111 NKE

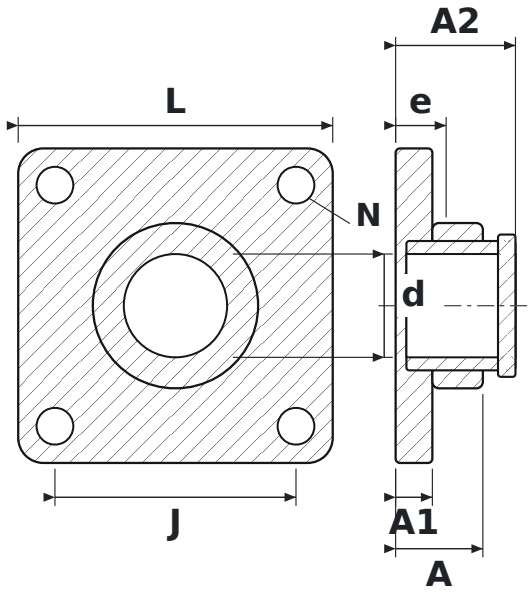

DIMENSIONS

d	shaft diameter	**45 mm**
L	housing length	**137 mm**
J	bolt hole spacing	**105 mm**
N	bolt hole diameter	**16 mm**
A	overall housing width (from mounting face)	**38 mm**
A1	flange thickness	**16 mm**
A2	overall length incl. protruding inner ring	**52.2 mm**
e	mounting face to bearing centre	**22 mm**

SPECIFICATIONS

Manufacturer	**NKE**
Manufacturer designation	**UCF209-111**
Rolling elements	**single-row ball bearing**