Bearing unit UCF211 NKE

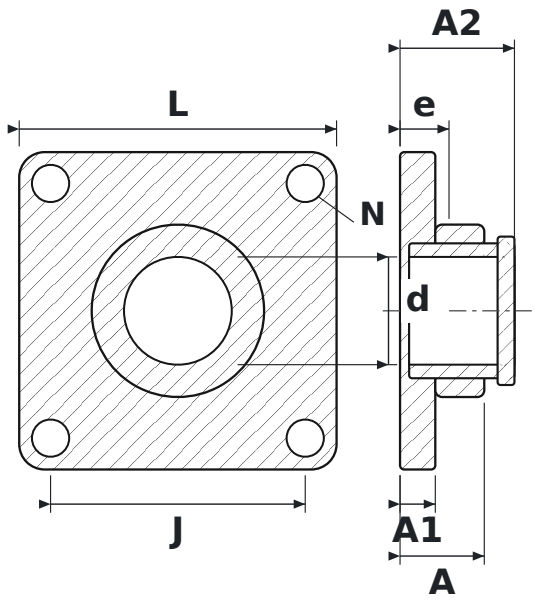

DIMENSIONS

d	shaft diameter	**55 mm**
L	housing length	**162 mm**
J	bolt hole spacing	**130 mm**
N	bolt hole diameter	**19 mm**
A	overall housing width (from mounting face)	**43 mm**
A1	flange thickness	**18 mm**
A2	overall length incl. protruding inner ring	**58.4 mm**
e	mounting face to bearing centre	**25 mm**

SPECIFICATIONS

Manufacturer	**NKE**
Manufacturer designation	**UCF211**
Rolling elements	**single-row ball bearing**