CASTOMER

DATASHEET

Bearing unit UCF212-38 FYH

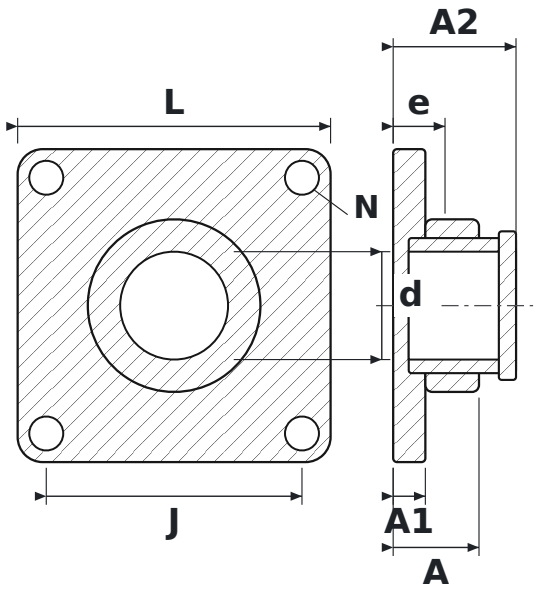

DIMENSIONS

d	shaft diameter	**60.33 mm**
L	housing length	**175 mm**
J	bolt hole spacing	**143 mm**
N	bolt hole diameter	**19 mm**
A	overall housing width (from mounting face)	**48 mm**
A1	flange thickness	**18 mm**
A2	overall length incl. protruding inner ring	**68.7 mm**
e	mounting face to bearing centre	**29 mm**

SPECIFICATIONS

Manufacturer	**FYH**
Manufacturer designation	**UCF212-38**
Rolling elements	**single-row ball bearing**