Bearing unit UCF213 J KOYO

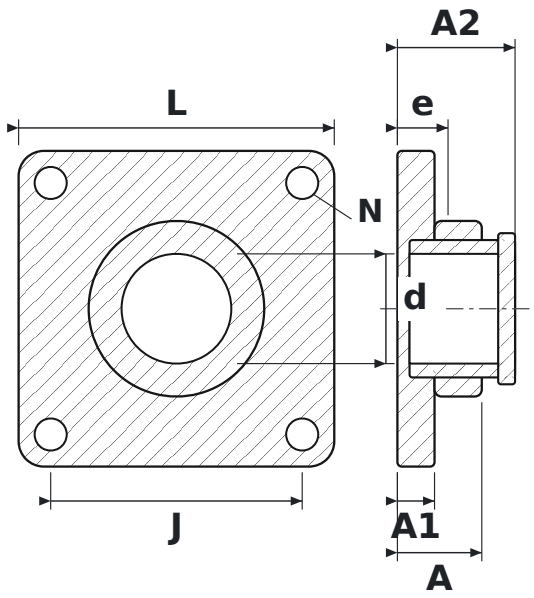

DIMENSIONS

d	shaft diameter	**65 mm**
L	housing length	**187 mm**
J	bolt hole spacing	**149 mm**
N	bolt hole diameter	**19 mm**
A	overall housing width (from mounting face)	**50 mm**
A1	flange thickness	**22 mm**
A2	overall length incl. protruding inner ring	**69.7 mm**
e	mounting face to bearing centre	**30 mm**

SPECIFICATIONS

Manufacturer	**KOYO**
Manufacturer designation	**UCF213 J**
Rolling elements	**single-row ball bearing**