Bearing unit UCF216 TIMKEN

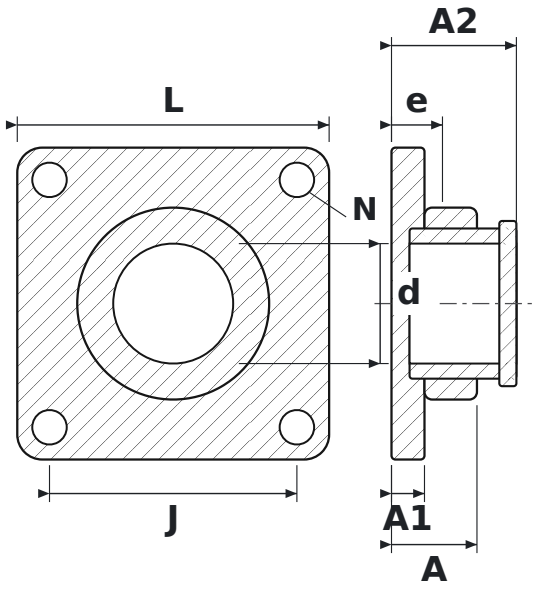

DIMENSIONS

d	shaft diameter	**80 mm**
L	housing length	**208 mm**
J	bolt hole spacing	**165 mm**
N	bolt hole diameter	**23 mm**
A	overall housing width (from mounting face)	**57 mm**
A1	flange thickness	**22 mm**
A2	overall length incl. protruding inner ring	**83.3 mm**
e	mounting face to bearing centre	**34 mm**

SPECIFICATIONS

Manufacturer	**TIMKEN**
Manufacturer designation	**UCF216**
Rolling elements	**single-row ball bearing**