Bearing unit UCF306 J KOYO

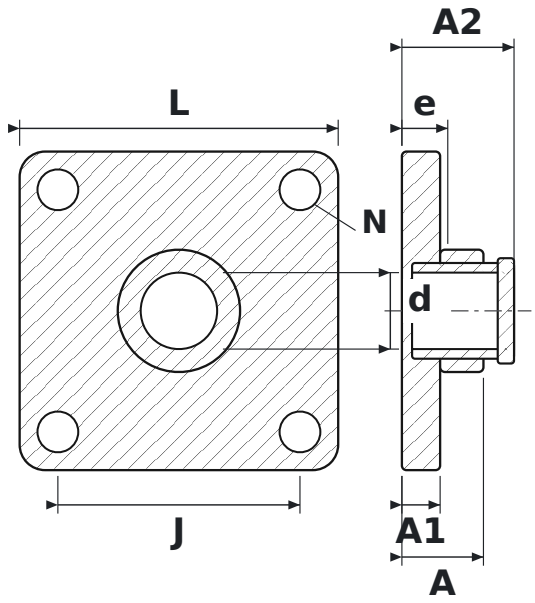

DIMENSIONS

d	shaft diameter	**30 mm**
L	housing length	**125 mm**
J	bolt hole spacing	**95 mm**
N	bolt hole diameter	**16 mm**
A	overall housing width (from mounting face)	**32 mm**
A1	flange thickness	**15 mm**
A2	overall length incl. protruding inner ring	**44 mm**
e	mounting face to bearing centre	**18 mm**

SPECIFICATIONS

Manufacturer	**KOYO**
Manufacturer designation	**UCF306 J**
Rolling elements	**single-row ball bearing**