Bearing unit UCF307 J KOYO

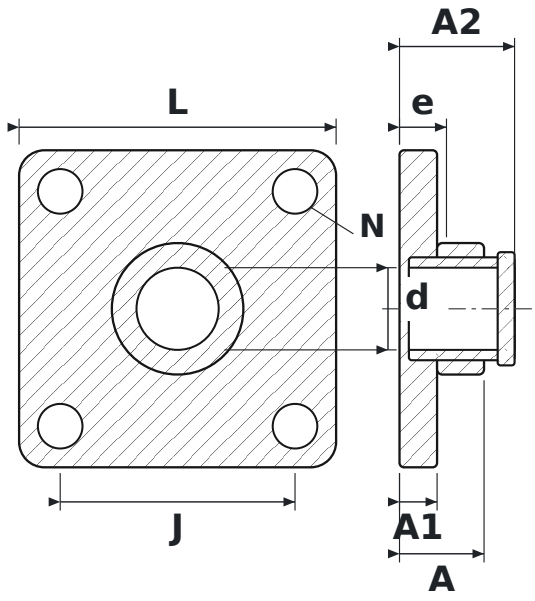

DIMENSIONS

d	shaft diameter	**35 mm**
L	housing length	**135 mm**
J	bolt hole spacing	**100 mm**
N	bolt hole diameter	**19 mm**
A	overall housing width (from mounting face)	**36 mm**
A1	flange thickness	**16 mm**
A2	overall length incl. protruding inner ring	**49 mm**
e	mounting face to bearing centre	**20 mm**

SPECIFICATIONS

Manufacturer	**KOYO**
Manufacturer designation	**UCF307 J**
Rolling elements	**single-row ball bearing**