Bearing unit UCF310 NKE

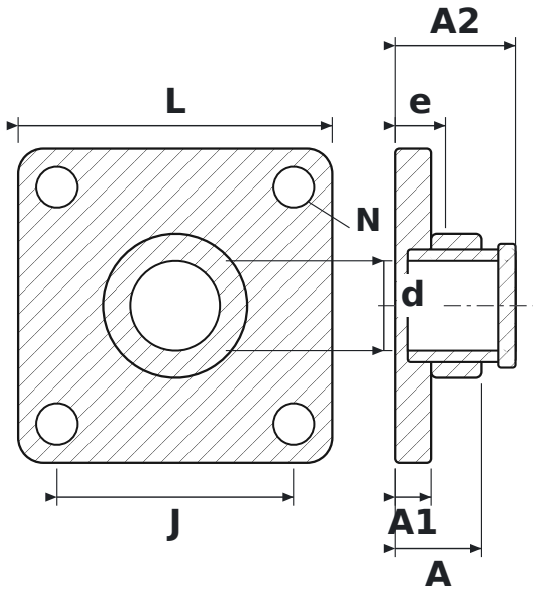

DIMENSIONS

d	shaft diameter	**50 mm**
L	housing length	**175 mm**
J	bolt hole spacing	**132 mm**
N	bolt hole diameter	**23 mm**
A	overall housing width (from mounting face)	**48 mm**
A1	flange thickness	**20 mm**
A2	overall length incl. protruding inner ring	**67 mm**
e	mounting face to bearing centre	**28 mm**

SPECIFICATIONS

Manufacturer	**NKE**
Manufacturer designation	**UCF310**
Rolling elements	**single-row ball bearing**