Bearing unit UCF312 KOYO

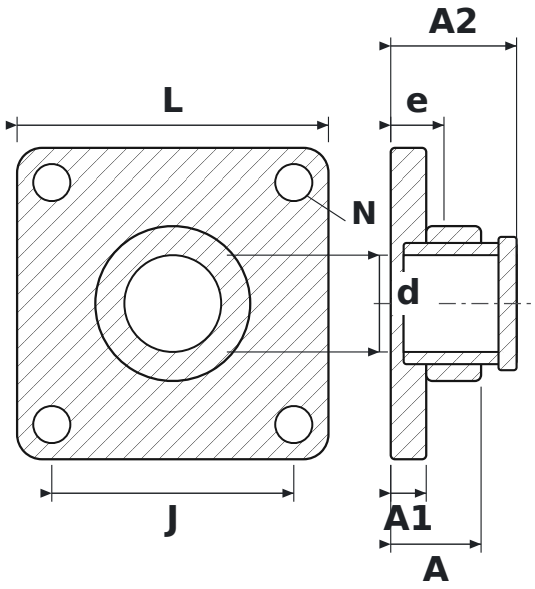

DIMENSIONS

d	shaft diameter	**60 mm**
L	housing length	**193 mm**
J	bolt hole spacing	**150 mm**
N	bolt hole diameter	**23 mm**
A	overall housing width (from mounting face)	**56 mm**
A1	flange thickness	**22 mm**
A2	overall length incl. protruding inner ring	**78 mm**
e	mounting face to bearing centre	**33 mm**

SPECIFICATIONS

Manufacturer	**KOYO**
Manufacturer designation	**UCF312**
Rolling elements	**single-row ball bearing**