Bearing unit UCF314 KOYO

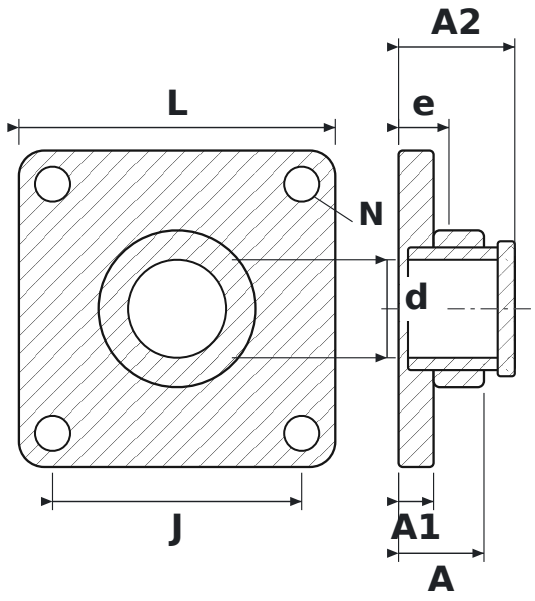

DIMENSIONS

d	shaft diameter	**70 mm**
L	housing length	**226 mm**
J	bolt hole spacing	**178 mm**
N	bolt hole diameter	**25 mm**
A	overall housing width (from mounting face)	**61 mm**
A1	flange thickness	**25 mm**
A2	overall length incl. protruding inner ring	**83 mm**
e	mounting face to bearing centre	**36 mm**

SPECIFICATIONS

Manufacturer	**KOYO**
Manufacturer designation	**UCF314**
Rolling elements	**single-row ball bearing**