Bearing unit UCF315 SKF

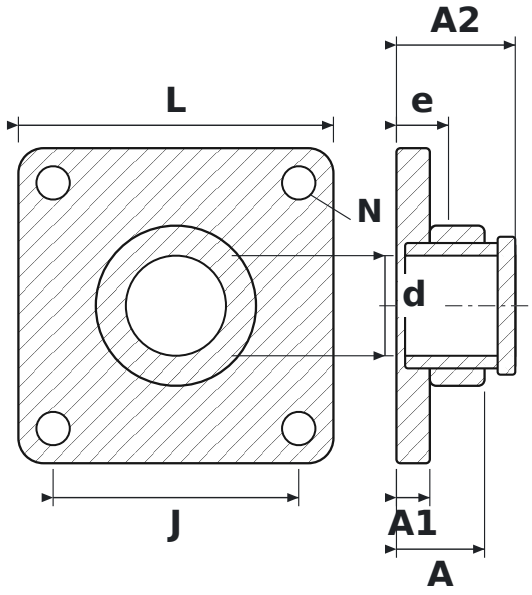

DIMENSIONS

d	shaft diameter	**75 mm**
L	housing length	**236 mm**
J	bolt hole spacing	**184 mm**
N	bolt hole diameter	**25 mm**
A	overall housing width (from mounting face)	**66 mm**
A1	flange thickness	**25 mm**
A2	overall length incl. protruding inner ring	**89 mm**
e	mounting face to bearing centre	**39 mm**

SPECIFICATIONS

Manufacturer	**SKF**
Manufacturer designation	**UCF315**
Rolling elements	**single-row ball bearing**