# Bearing unit UCFA205-J7 FAG

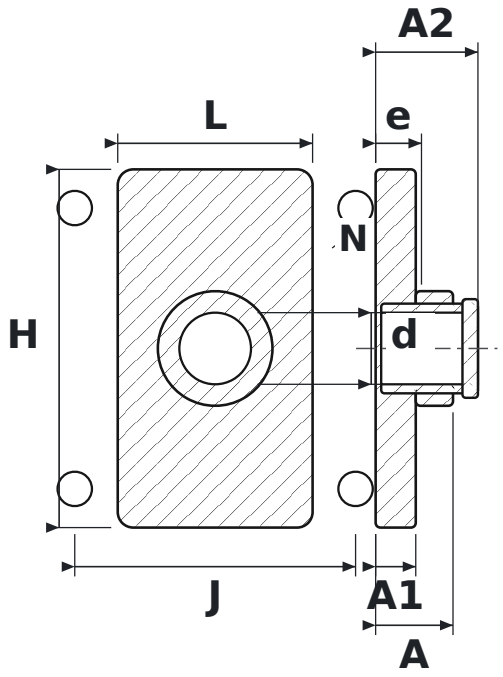


## DIMENSIONS

| | | |
|---|---|---|
| **d** | shaft diameter | **25 mm** |
| **L** | housing length | **68 mm** |
| **H** | housing height | **125 mm** |
| **J** | bolt hole spacing | **98 mm** |
| **N** | bolt hole diameter | **12 mm** |
| **A** | overall housing width (from mounting face) | **27 mm** |
| **A1** | flange thickness | **14 mm** |
| **A2** | overall length incl. protruding inner ring | **35.7 mm** |
| **e** | mounting face to bearing centre | **16 mm** |

## SPECIFICATIONS

| | |
|---|---|
| Manufacturer | **FAG** |
| Manufacturer designation | **UCFA205-J7** |
| Rolling elements | **single-row ball bearing** |