Bearing unit UCFC204 D1 RHP

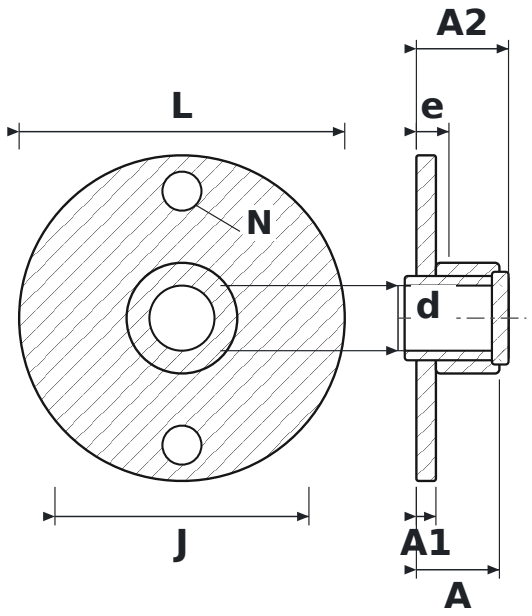

DIMENSIONS

d	shaft diameter	**20 mm**
L	housing length	**100 mm**
J	bolt hole spacing	**78 mm**
N	bolt hole diameter	**12 mm**
A	overall housing width (from mounting face)	**25.5 mm**
A1	flange thickness	**6 mm**
A2	overall length incl. protruding inner ring	**28.3 mm**
e	mounting face to bearing centre	**10 mm**

SPECIFICATIONS

Manufacturer	**RHP**
Manufacturer designation	**UCFC204 D1**
Rolling elements	**single-row ball bearing**