Bearing unit UCFC205-14 FYH

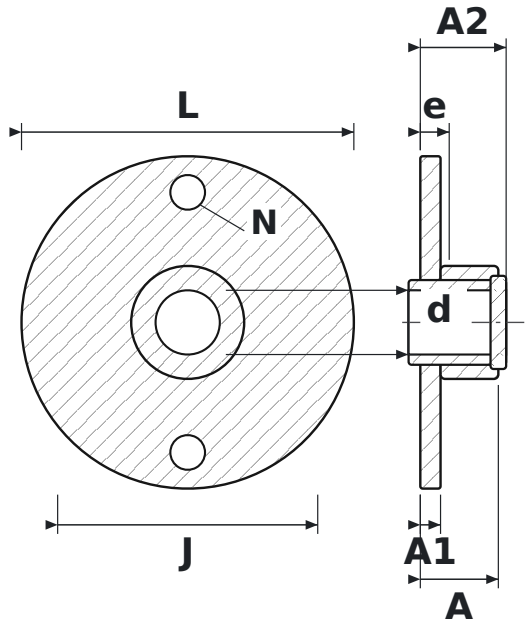

DIMENSIONS

d	shaft diameter	**22.23 mm**
L	housing length	**115 mm**
J	bolt hole spacing	**90 mm**
N	bolt hole diameter	**12 mm**
A	overall housing width (from mounting face)	**27 mm**
A1	flange thickness	**7 mm**
A2	overall length incl. protruding inner ring	**29.7 mm**
e	mounting face to bearing centre	**10 mm**

SPECIFICATIONS

Manufacturer	**FYH**
Manufacturer designation	**UCFC205-14**
Rolling elements	**single-row ball bearing**