Bearing unit UCFC206 SNR

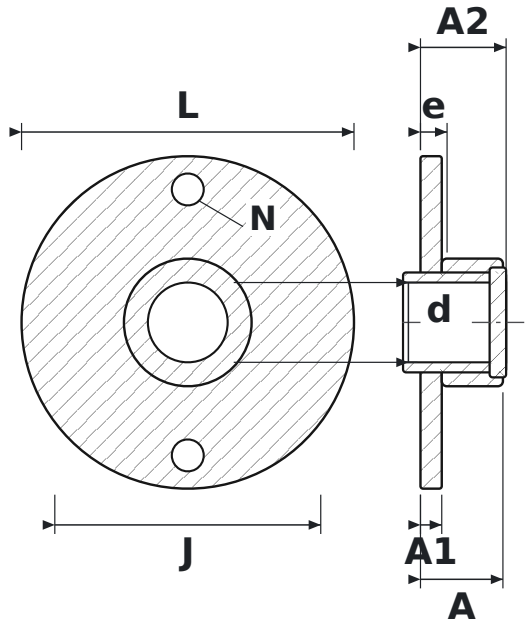

DIMENSIONS

d	shaft diameter	**30 mm**
L	housing length	**125 mm**
J	bolt hole spacing	**100 mm**
N	bolt hole diameter	**12 mm**
A	overall housing width (from mounting face)	**31 mm**
A1	flange thickness	**8 mm**
A2	overall length incl. protruding inner ring	**32.2 mm**
e	mounting face to bearing centre	**10 mm**

SPECIFICATIONS

Manufacturer	**SNR**
Manufacturer designation	**UCFC206**
Rolling elements	**single-row ball bearing**
Mass	**1.326 kg**