Bearing unit UCFC207-20 FYH

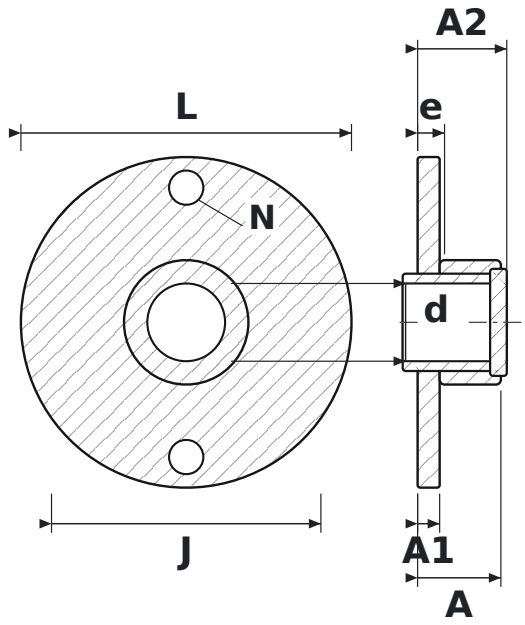

DIMENSIONS

d	shaft diameter	**31.75 mm**
L	housing length	**135 mm**
J	bolt hole spacing	**110 mm**
N	bolt hole diameter	**14 mm**
A	overall housing width (from mounting face)	**34 mm**
A1	flange thickness	**9 mm**
A2	overall length incl. protruding inner ring	**36.4 mm**
e	mounting face to bearing centre	**11 mm**

SPECIFICATIONS

Manufacturer	**FYH**
Manufacturer designation	**UCFC207-20**
Rolling elements	**single-row ball bearing**