Bearing unit UCFC210 FYH

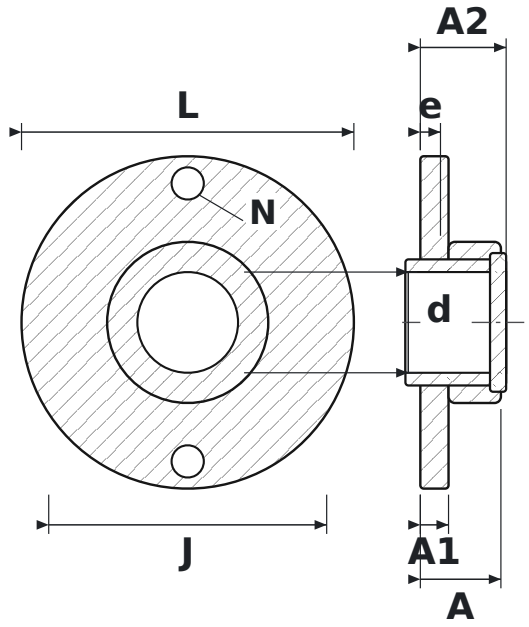

DIMENSIONS

d	shaft diameter	**50 mm**
L	housing length	**165 mm**
J	bolt hole spacing	**138 mm**
N	bolt hole diameter	**16 mm**
A	overall housing width (from mounting face)	**40 mm**
A1	flange thickness	**14 mm**
A2	overall length incl. protruding inner ring	**42.6 mm**
e	mounting face to bearing centre	**10 mm**

SPECIFICATIONS

Manufacturer	**FYH**
Manufacturer designation	**UCFC210**
Rolling elements	**single-row ball bearing**