Bearing unit UCFC211-32 J KOYO

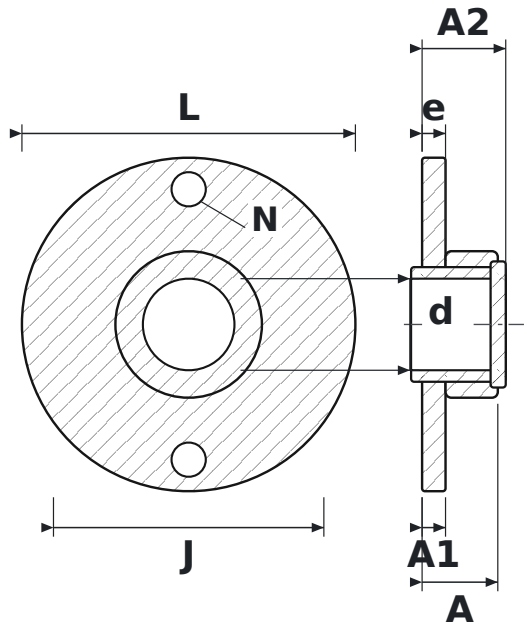

DIMENSIONS

d	shaft diameter	**50.8 mm**
L	housing length	**185 mm**
J	bolt hole spacing	**150 mm**
N	bolt hole diameter	**19 mm**
A	overall housing width (from mounting face)	**42 mm**
A1	flange thickness	**13 mm**
A2	overall length incl. protruding inner ring	**46.4 mm**
e	mounting face to bearing centre	**13 mm**

SPECIFICATIONS

Manufacturer	**KOYO**
Manufacturer designation	**UCFC211-32 J**
Rolling elements	**single-row ball bearing**