Bearing unit UCFC212 TIMKEN

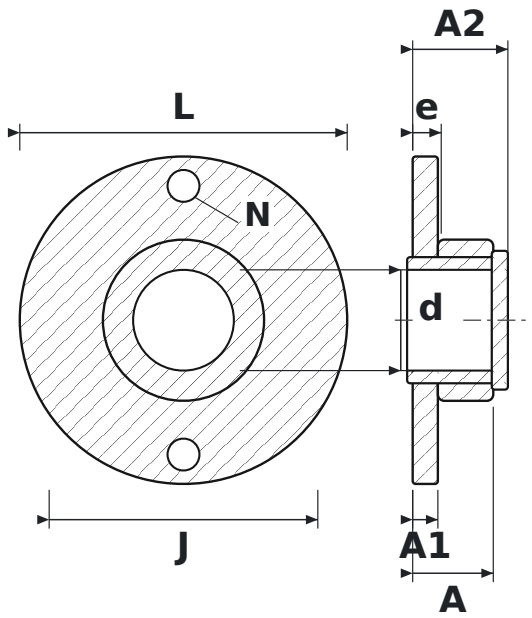

DIMENSIONS

d	shaft diameter	**60 mm**
L	housing length	**195 mm**
J	bolt hole spacing	**160 mm**
N	bolt hole diameter	**19 mm**
A	overall housing width (from mounting face)	**48 mm**
A1	flange thickness	**15 mm**
A2	overall length incl. protruding inner ring	**56.7 mm**
e	mounting face to bearing centre	**17 mm**

SPECIFICATIONS

Manufacturer	**TIMKEN**
Manufacturer designation	**UCFC212**
Rolling elements	**single-row ball bearing**