Bearing unit UCFC213 FYH

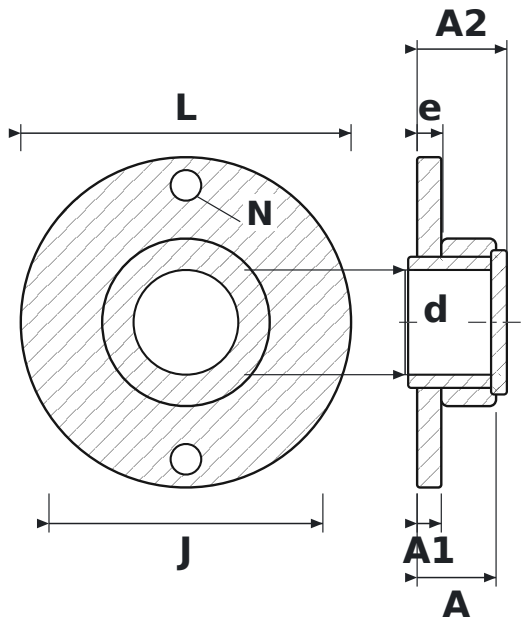

DIMENSIONS

d	shaft diameter	**65 mm**
L	housing length	**205 mm**
J	bolt hole spacing	**170 mm**
N	bolt hole diameter	**19 mm**
A	overall housing width (from mounting face)	**49 mm**
A1	flange thickness	**15 mm**
A2	overall length incl. protruding inner ring	**55.7 mm**
e	mounting face to bearing centre	**16 mm**

SPECIFICATIONS

Manufacturer	**FYH**
Manufacturer designation	**UCFC213**
Rolling elements	**single-row ball bearing**