Bearing unit UCFC214-212 NKE

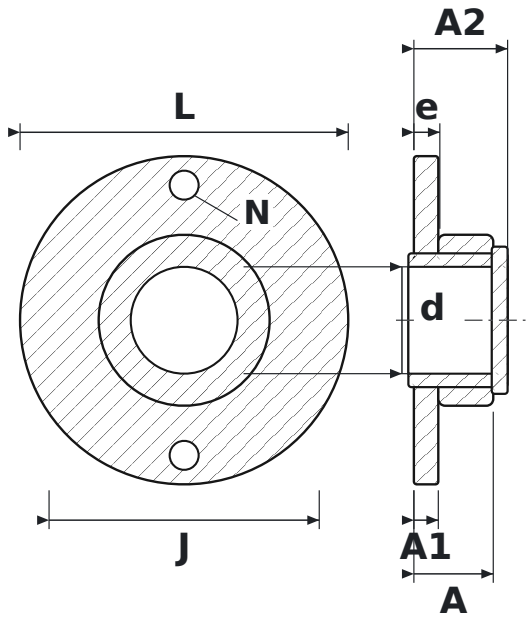

DIMENSIONS

d	shaft diameter	**70 mm**
L	housing length	**215 mm**
J	bolt hole spacing	**177 mm**
N	bolt hole diameter	**19 mm**
A	overall housing width (from mounting face)	**52 mm**
A1	flange thickness	**16 mm**
A2	overall length incl. protruding inner ring	**61.4 mm**
e	mounting face to bearing centre	**17 mm**

SPECIFICATIONS

Manufacturer	**NKE**
Manufacturer designation	**UCFC214-212**
Rolling elements	**single-row ball bearing**